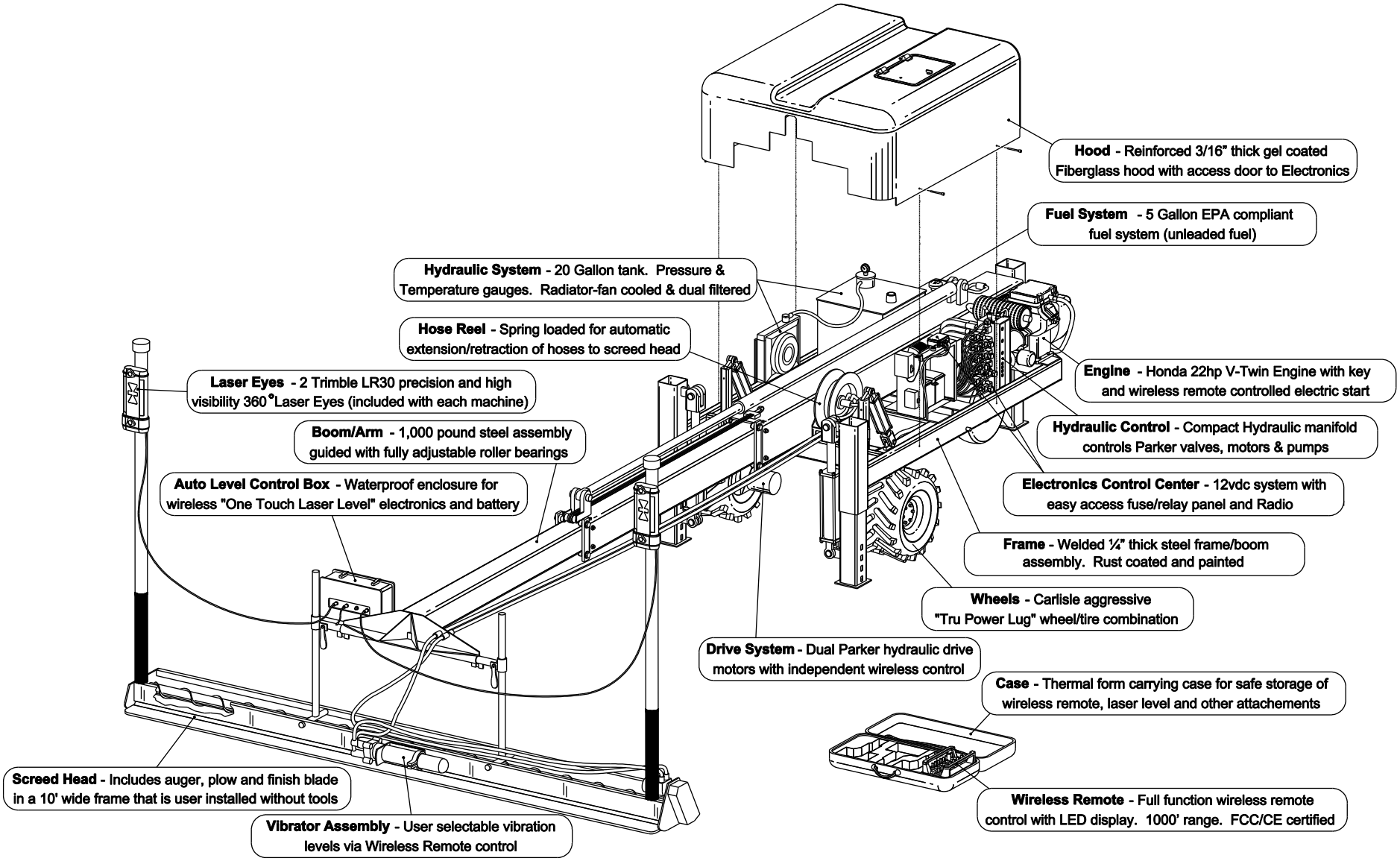
Hood - Reinforced 3/16" thick gel coated Fiberglass hood with access door to Electronics
Fuel System - 5 Gallon EPA compliant fuel system (unleaded fuel)
Hydraulic System - 20 Gallon tank. Pressure & Temperature gauges. Radiator-fan cooled & dual filtered
Hose Reel - Spring loaded for automatic extension/retraction of hoses to screed head
Laser Eyes - 2 Trimble LR30 precision and high visibility 360°Laser Eyes (included with each machine)
Boom/Arm - 1,000 pound steel assembly guided with fully adjustable roller bearings
Auto Level Control Box - Waterproof enclosure for wireless "One Touch Laser Level" electronics and battery
Engine - Honda 22hp V-Twin Engine with key and wireless remote controlled electric start
Hydraulic Control - Compact Hydraulic manifold controls Parker valves, motors & pumps
Electronics Control Center - 12vdc system with easy access fuse/relay panel and Radio
Frame - Welded ¼" thick steel frame/boom assembly. Rust coated and painted
Wheels - Carlisle aggressive "Tru Power Lug" wheel/tire combination
Drive System - Dual Parker hydraulic drive motors with independent wireless control
Case - Thermal form carrying case for safe storage of wireless remote, laser level and other attachements
Screed Head - Includes auger, plow and finish blade in a 10' wide frame that is user installed without tools
Vibrator Assembly - User selectable vibration levels via Wireless Remote control
Wireless Remote - Full function wireless remote control with LED display. 1000' range. FCC/CE certified